CT83x Series

Omnipolar TMR Switch for Consumer & Industrial Applications

Product Description

The CT83x Series integrated magnetic switches are designed for consumer switching applications, based on Crocus Technology's patented Magnetic Logic Unit™ (MLU™) technology with integrated CMOS process.

SOT-23 Package

The CT83x Series magnetic switches feature industry leading low power consumption as low as 200nA. They are capable of handling large air gap applications with low magnetic fields down to 3 mT and, with best in class high frequency performance. The CT83x is offered in active-low push-pull CMOS and open drain configuration for design flexibility. The CT83x is available in low profile LGA and SOT-23 packages, providing cost and space effective solutions for high volume manufacturing. Please contact factory for custom solutions.

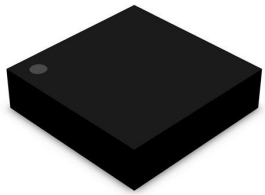

1.4 x 1.4 x 0.44 mm LGA Package

Features and Benefits

- High sensitivity, B_{OP} = 3 mT
- Resistant to mechanical stress
- Ultra-low power consumption as low as 200nA
- Digital CMOS push-pull and open drain options
- Cost effective
- RoHS Compliant

Application Examples

- Door or lid closure detection
- Smart phones, tablets, and laptops
- Reed switch replacement
- Motor controllers
- Proximity detection
- Power switch or open-close detection
- Water, electric, and gas utility meters
- Fluid level detection

Table 1: Absolute Maximum Ratings

Exceeding the absolute maximum ratings may cause permanent damage. Exposure to absolute maximum rated conditions for extended periods may affect device reliability.

Parameter	Symbol	Min	Max	Unit
VDD to GND		-0.3	5	V
OUTB to GND		-0.3	VCC+0.3	V
Current into or out of any pin		-10	10	mA
Junction temperature	T_J	-40	125	°C
Storage temperature	T_{STG}		150	°C
Soldering temperature	T_{SOL}		260	°C
ESD Level (HBM)	V_{ESD}		2,000	V

Table 2: Electrical Characteristics for CT832 Series

Supply Voltage VDD = 3.0V, ambient temperature T_A = 25 °C unless otherwise specified.

Characteristic	Symbol	Conditions	Min	Typ	Max	Unit
Operating Temperature	T_A		-40	25	85	°C
Operating Magnetic Flux	B		-10		10	mT
Supply Voltage	V_{DD}		2.7	3.0	3.6	V
Output Voltage High OUTB	V_{OH}	I_{OUT} or I_{OUTB} = - 2 mA	$0.9xV_{DD}$			V
Output Voltage Low OUTB	V_{OL}	I_{OUT} or I_{OUTB} = 2 mA			$0.1xV_{DD}$	V

Table 3: Electrical Characteristics for CT832BV

Supply Voltage VDD = 3.0V, ambient temperature T_A = 25 °C unless otherwise specified.

Characteristic	Symbol	Conditions	Min	Typ	Max	Unit
Average Current	$I_{VDD(AVG)}$			200		nA
Active Mode Current	I_{ACT}			3.4		mA
Sleep Mode Current	I_{SLP}			190		nA
Sampling Frequency	f_{SW}			2		Hz
Active Mode Time	T_{ACT}			1.4		µS
Sleep Mode Time	T_{SLP}			500		mS
Operate Point	B_{OPS}			3		mT
Operate Point	B_{OPN}			-3		mT
Release point	B_{RPS}			2		mT
Release point	B_{RPN}			-2		mT

Figure 1: Magnetic Flux

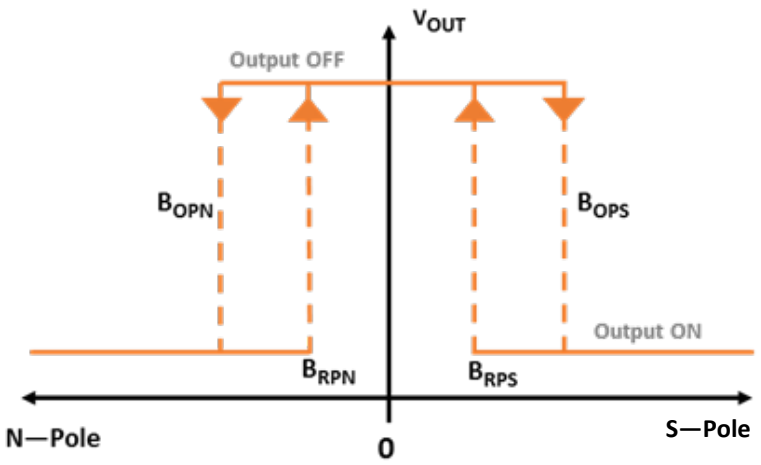

Output Behavior versus Magnetic Field

Characteristic	Conditions	Output
South Pole	$B > B_{OPS}$	Low (ON)
	$0 < B < B_{RPS}$	High (OFF)
North Pole	$B < B_{OPN}$	Low (ON)
	$0 > B > B_{RPN}$	High (OFF)

Figure 2: Package Pinout

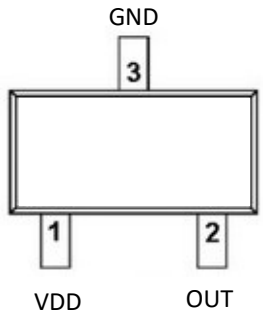

SOT-23 Package

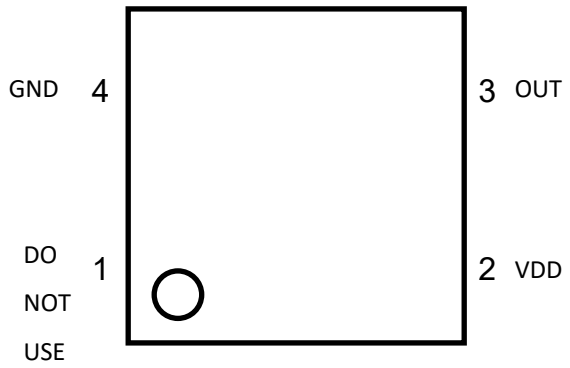

LGA Package

Figure 3: Application Circuit

A decoupling capacitor between the supply voltage and ground is required with placement close to the magnetic switch. A typical capacitor value of 1 µF (Ceramic) will suffice.

CT832 Digital Output

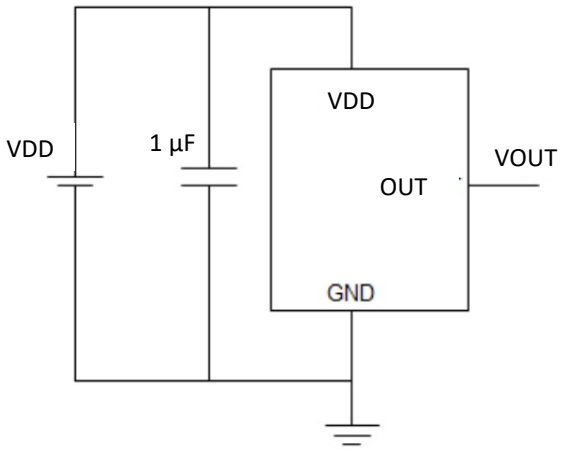

Figure 4: SOT-23 Package Dimensions

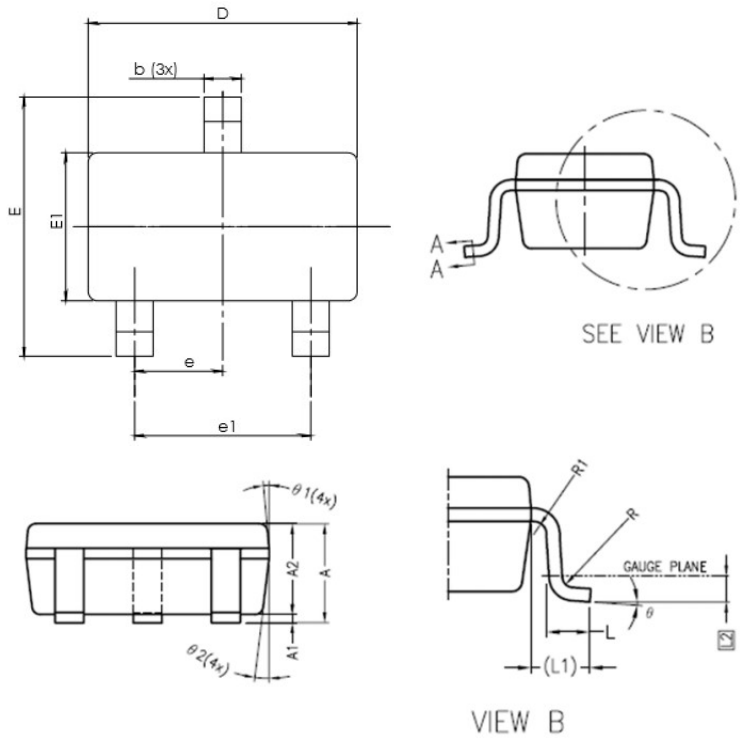

SYMBOLS	DIMENSIONS IN MILLIMETERS		
	MIN	NOM	MAX
A	1.05	1.20	1.35
A1	0.00	0.10	0.15
A2	1.00	1.10	1.20
b	0.30	———	0.50
b1	0.30	0.35	0.45
c	0.08	———	0.22
c1	0.08	0.13	0.20
D	2.80	2.90	3.00
E	2.60	2.80	3.00
E1	1.50	1.60	1.70
e	0.95 BSC		
e1	1.90 BSC		
L	0.35	0.43	0.60
L1	0.60 REF		
L2	0.25 BSC.		
R	0.10	———	———
R1	0.10	———	0.25
θ	0°	4°	8°
θ1	5°	6°	15°
θ2	5°	8°	15°

Figure 5: LGA Package Dimensions

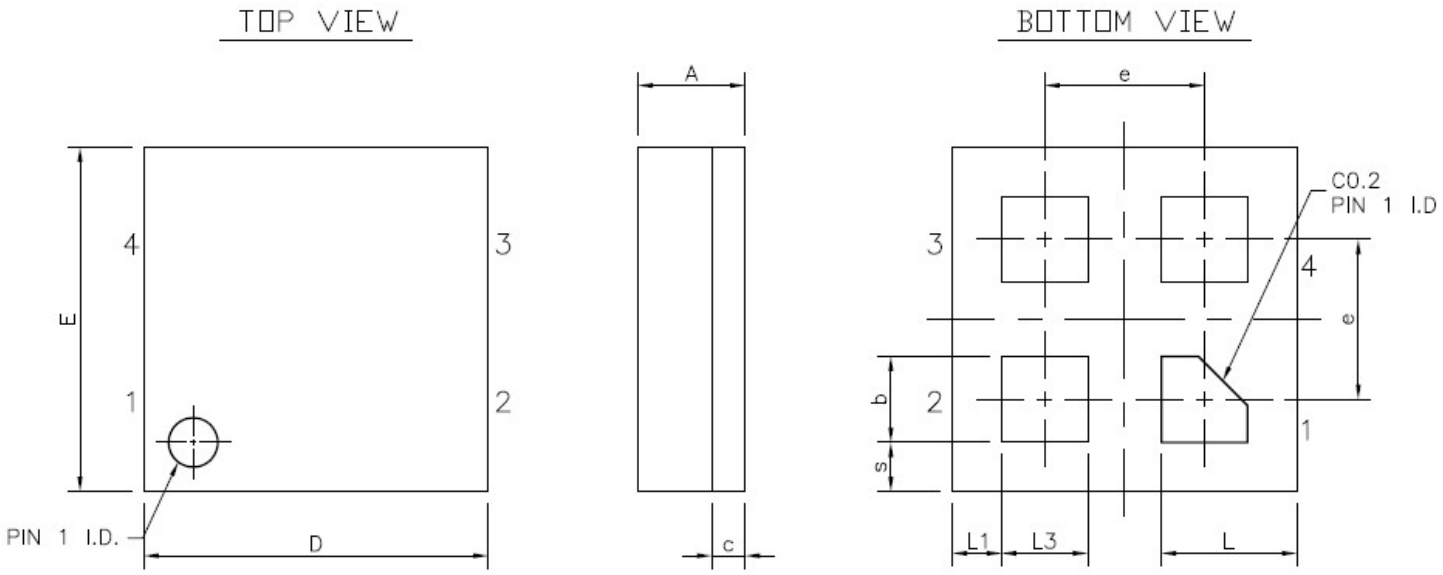

NOTE: ALL DIMENSIONS ARE IN MILLIMETERS.

SYMBOLS	DIMENSIONS IN MILLIMETERS		
	MIN.	NOM.	MAX.
A	0.386	0.436	0.486
b	0.30	0.35	0.40
c	---	0.136 REF.	---
D	1.35	1.40	1.45
E	1.35	1.40	1.45
e	---	0.65	---
L	0.50	0.55	0.60
L1	0.15	0.20	0.25
L3	0.30	0.35	0.40
s	0.15	0.20	0.25

Figure 6: Sensor Polarity Configuration

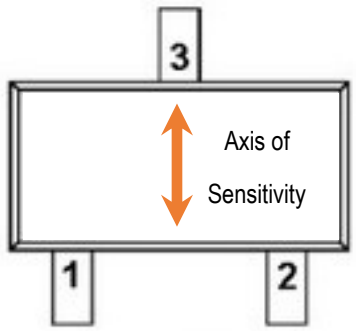

SOT-23 Package

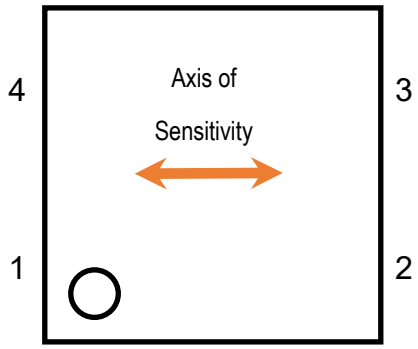

LGA Package

Figure 7: MLU Sensor Location

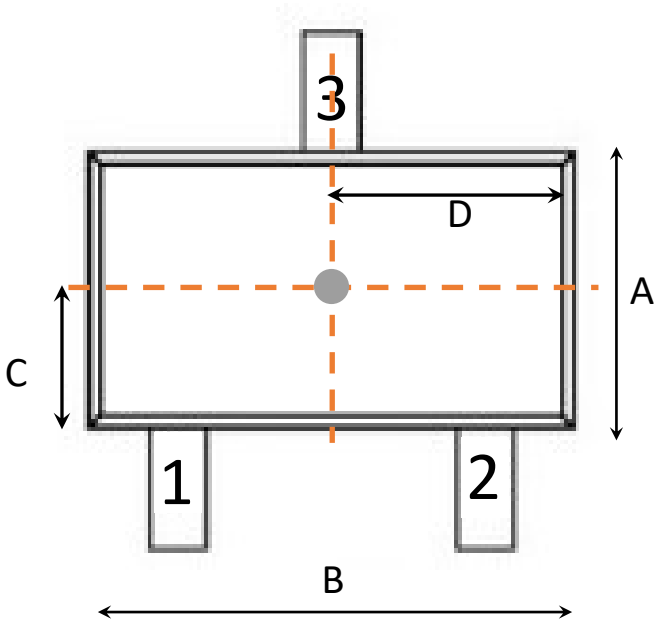

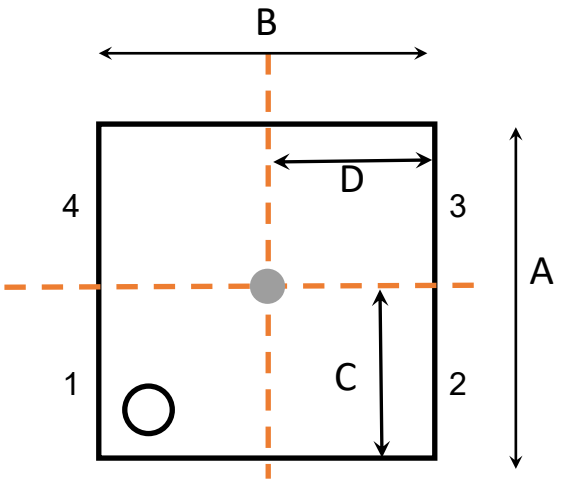

LGA Package

Symbols	Nominal Dimensions (mm)
A	1.60
B	2.90
C	0.80
D	1.45

Symbols	Nominal Dimensions (mm)
A	1.4
B	1.4
C	0.7
D	0.7

Table 8: Order Guide

Part Number	Digital Output	Average Current	Switching Frequency	Description
CT832BV-L1	Push-Pull	200 nA	2 Hz	Omnipolar magnetic switch LGA, Tape & Reel packaging
CT832BV-S3		200 nA	2 Hz	Omnipolar magnetic switch SOT-23 Package, Tape-and-Reel packaging

Figure 9: Part Number Legend

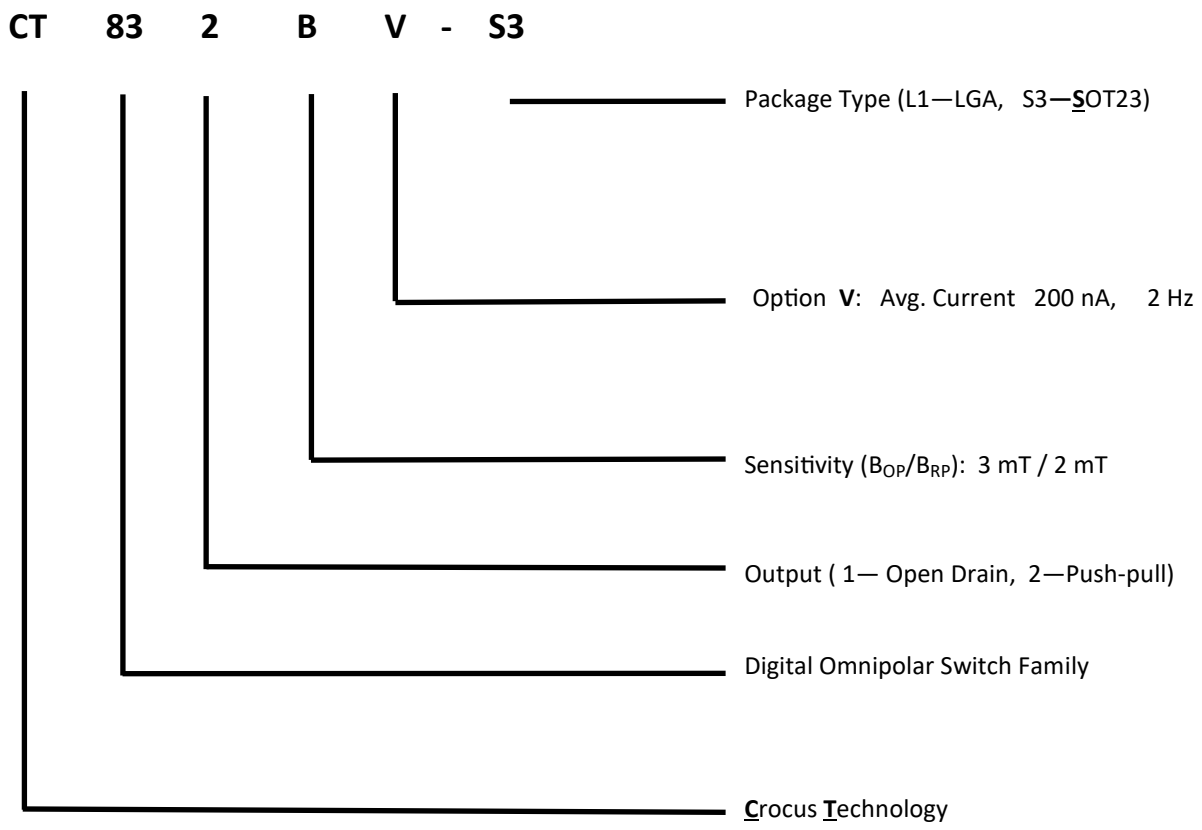

Revision Number	Revision Date	Summary of Changes
0.1	5/12/17	Datasheet Initiated
0.2	6/2/17	Updated electrical characteristics, application circuit, and disclaimer clause.

Disclaimer: The contents of this document are provided for informational purposes only. CROCUS TECHNOLOGY, INC. AND CROCUS TECHNOLOGY SA (COLLECTIVELY "CROCUS") MAKE NO REPRESENTATIONS OR WARRANTY OF ANY KIND, EXPRESS OR IMPLIED, WITH RESPECT TO THE ACCURACY OR COMPLETENESS OF THE CONTENTS HEREIN, INCLUDING, BUT NOT LIMITED TO, THE IMPLIED WARRANTIES OF MERCHANTABILITY AND FITNESS FOR A PARTICULAR PURPOSE. Crocus reserves the right to make changes to the specifications and product descriptions, and/or to discontinue or make changes to its products at any time without notice. Crocus's products have not been designed, tested, or manufactured for use and should not be used in applications where the failure, malfunction or inaccuracy of the Products carries a risk of death or serious bodily injury or damage to tangible property, including, but not limited to, life support systems, nuclear facilities, military, aircraft navigation or communication, emergency systems, harsh environments, or other applications with a similar degree of potential hazard.

© 2017 Crocus Technology, Inc. and Crocus Technology SA. All rights reserved. Crocus Technology, Intelligence in Sensing, MLU, and combinations thereof are trademarks of Crocus Technology, Inc. and Crocus Technology SA.